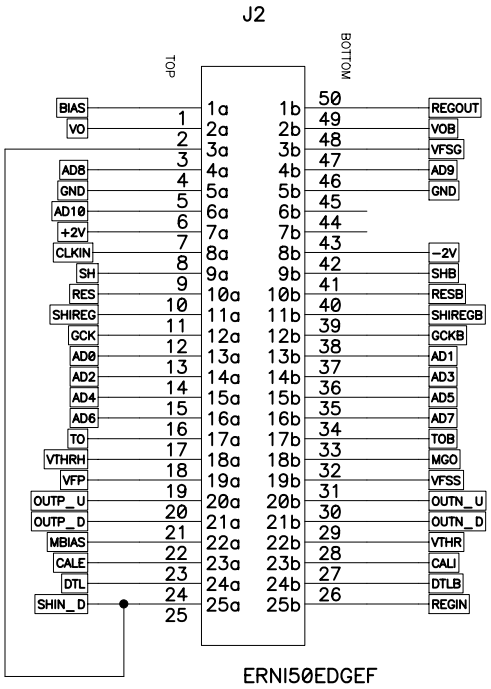

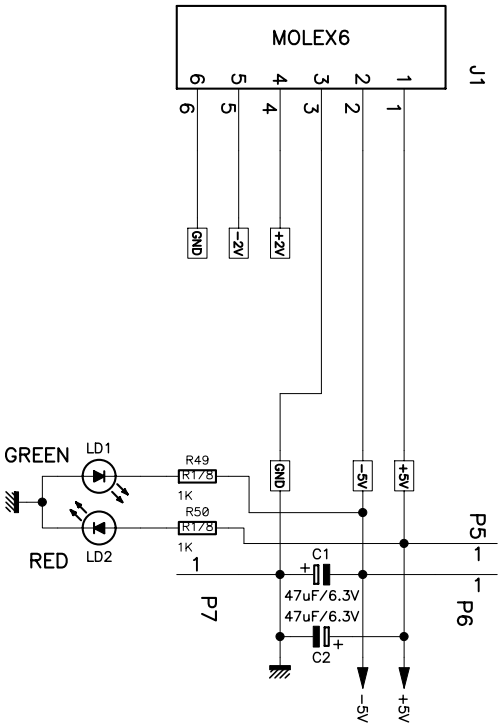

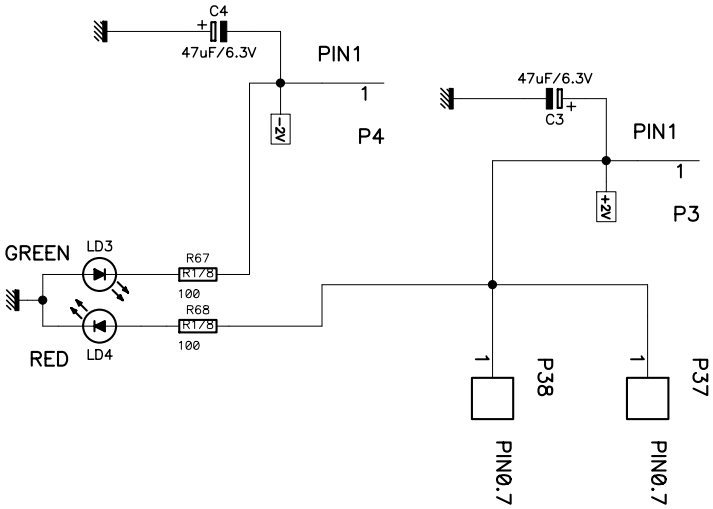

VaTalB16
Sheet #1 of 6

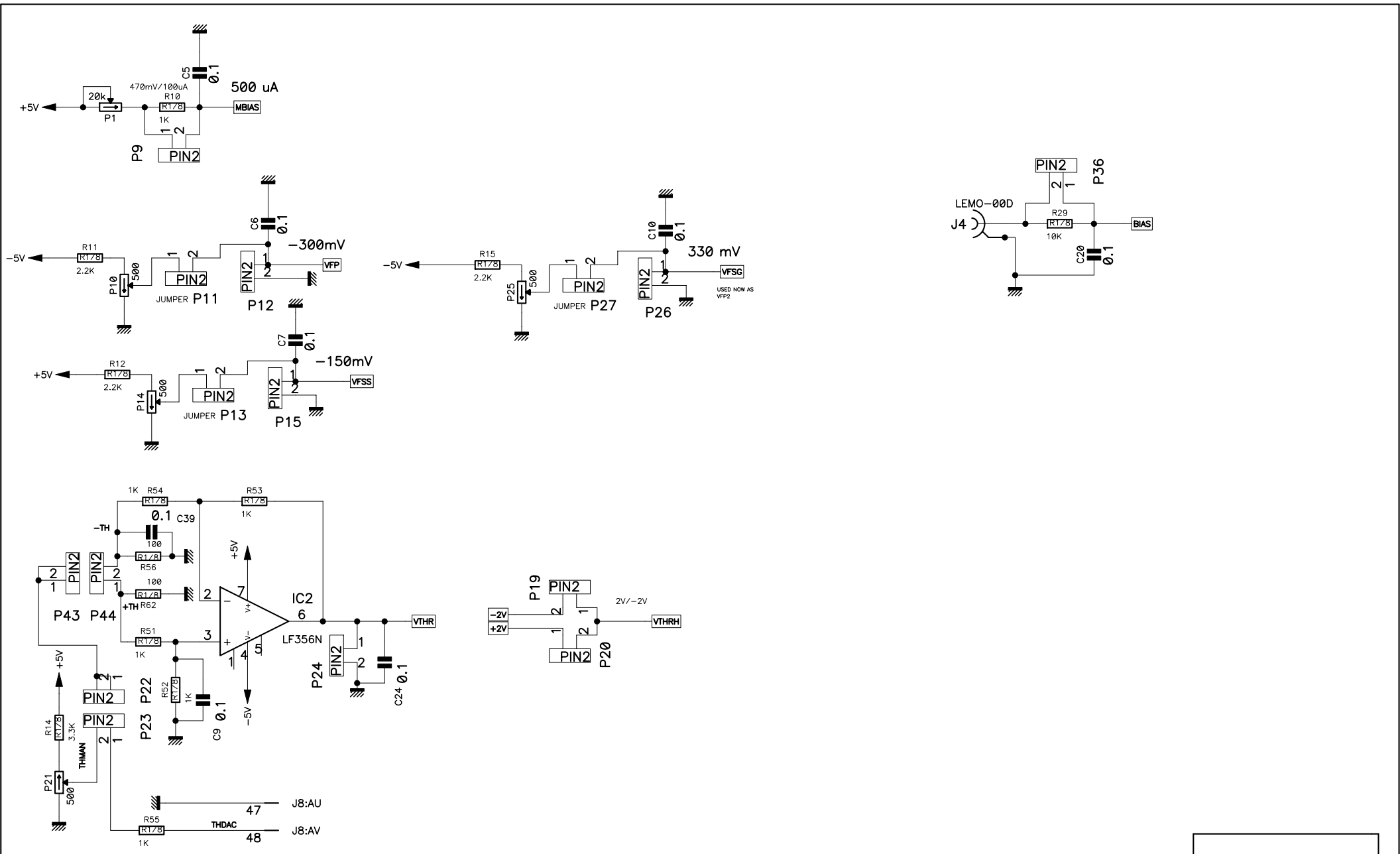

VaTalB16
Sheet #2 of 6

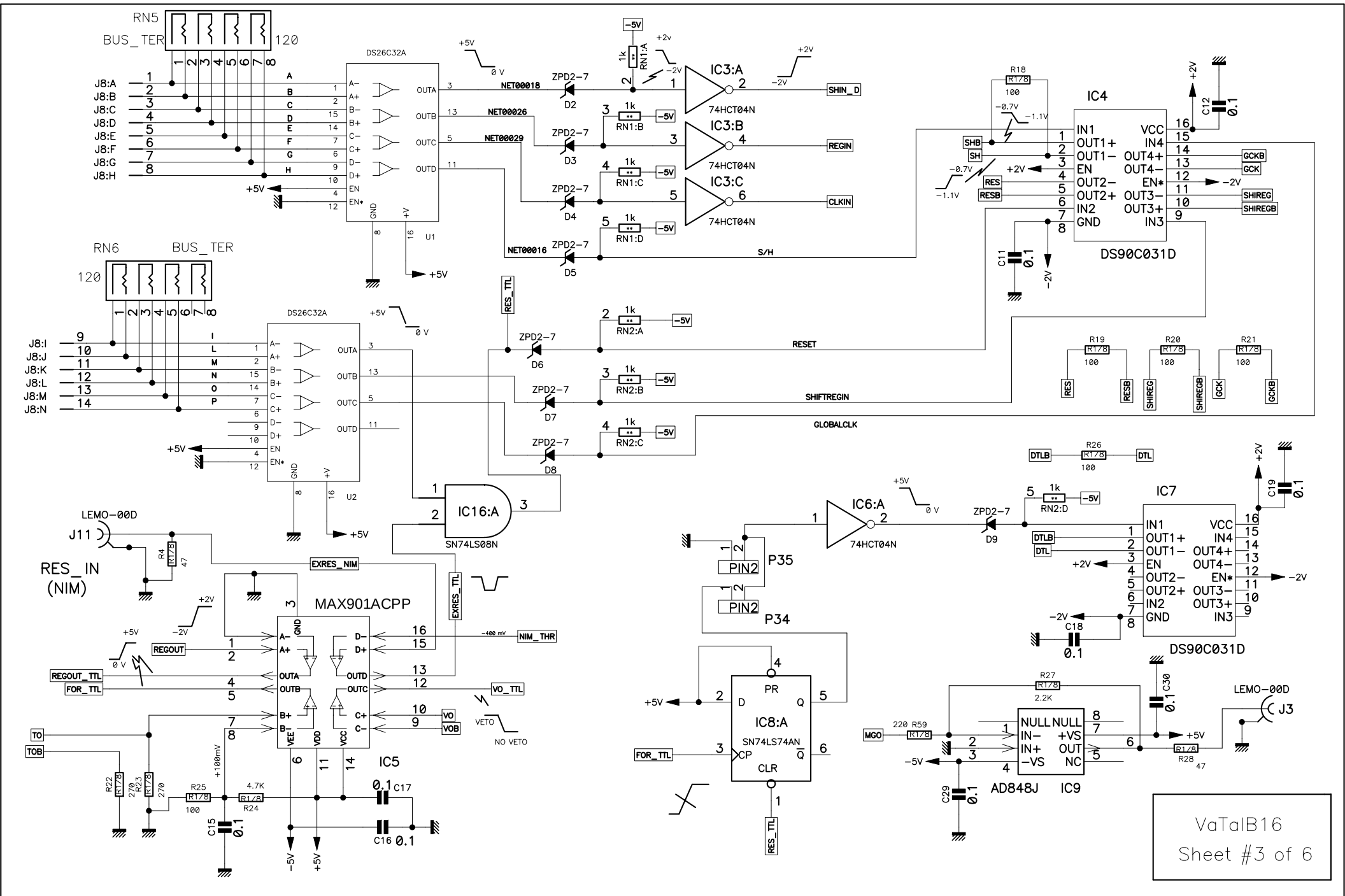
RN5
BUS_TER
120
DS26C32A
U1
J8:A
J8:B
J8:C
J8:D
J8:E
J8:F
J8:G
J8:H
NET00018
NET00026
NET00029
NET00016
ZPD2-7
D2
D3
D4
D5
RN1:A
RN1:B
RN1:C
RN1:D
IC3:A
IC3:B
IC3:C
74HCT04N
SHIN_D
REGIN
CLKIN
S/H
IC4
DS90C031D
R18
R178
100
C12
0.1
C11
SHB
SH
RES
RESB
GCKB
GCK
SHIREG
SHIREGB
R19
R20
R21
RN6
BUS_TER
120
DS26C32A
U2
J8:I
J8:J
J8:K
J8:L
J8:M
J8:N
RESET
SHIFTREGIN
GLOBALCLK
RN2:A
RN2:B
RN2:C
D6
D7
D8
IC16:A
SN74LS08N
LEMO-00D
J11
RES_IN
(NIM)
R4
47
EXRES_NIM
EXRES_TTL
MAX901ACPP
IC5
REGOUT
REGOUT_TTL
FOR_TTL
NIM_THR
VO_TTL
VO
VOB
VETO
NO VETO
TO
TOB
R22
R23
R25
R24
4.7K
C15
C16
C17
IC6:A
74HCT04N
D9
RN2:D
DTLB
DTL
R26
IC7
DS90C031D
C18
C19
P35
P34
PIN2
IC8:A
SN74LS74AN
PR
CLR
D
Q
CP
R27
2.2K
MGO
220 R59
AD848J
IC9
C29
C30
LEMO-00D
J3
R28
47
VaTalB16
Sheet #3 of 6

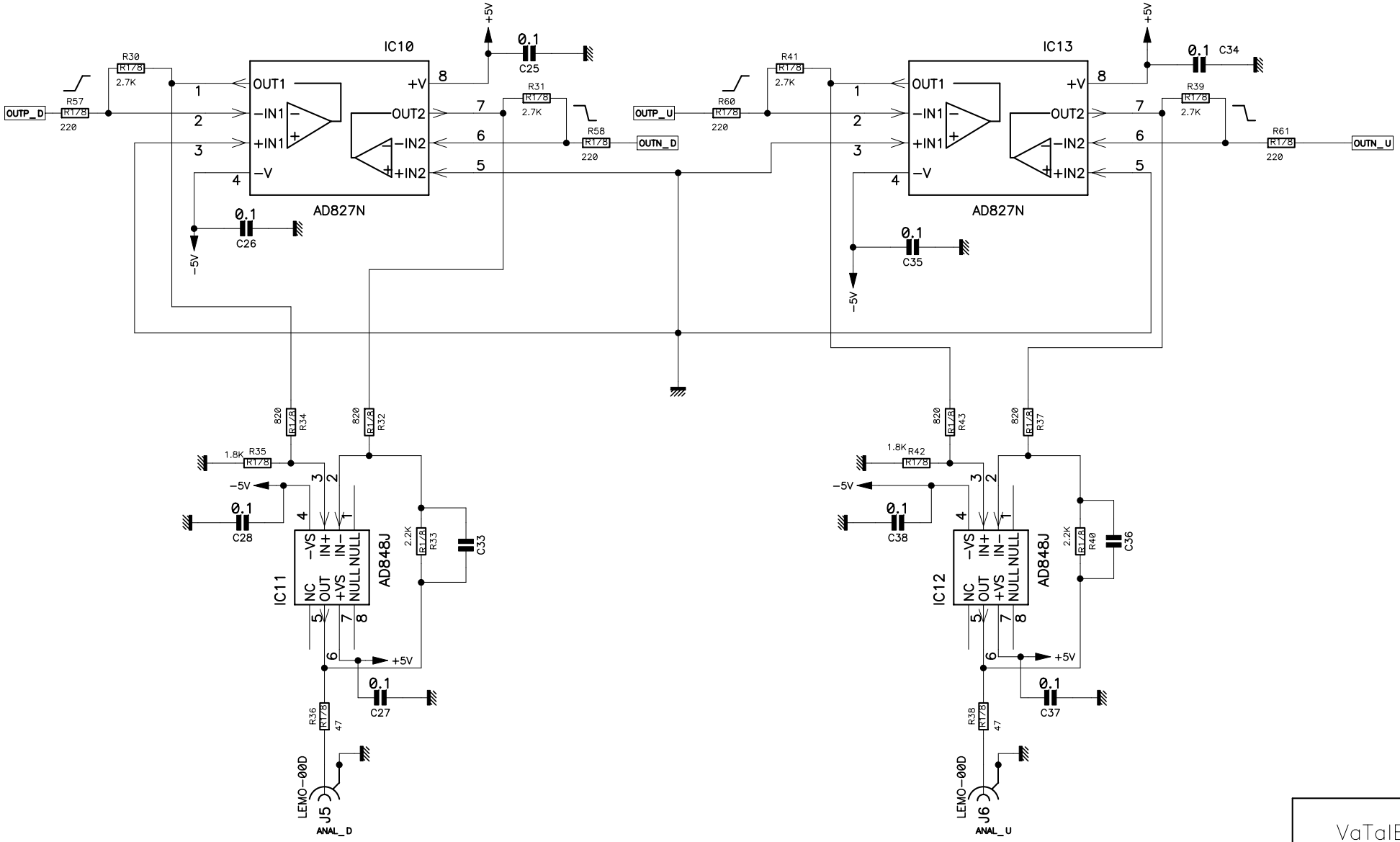

VaTalB16

Sheet #4 of 6

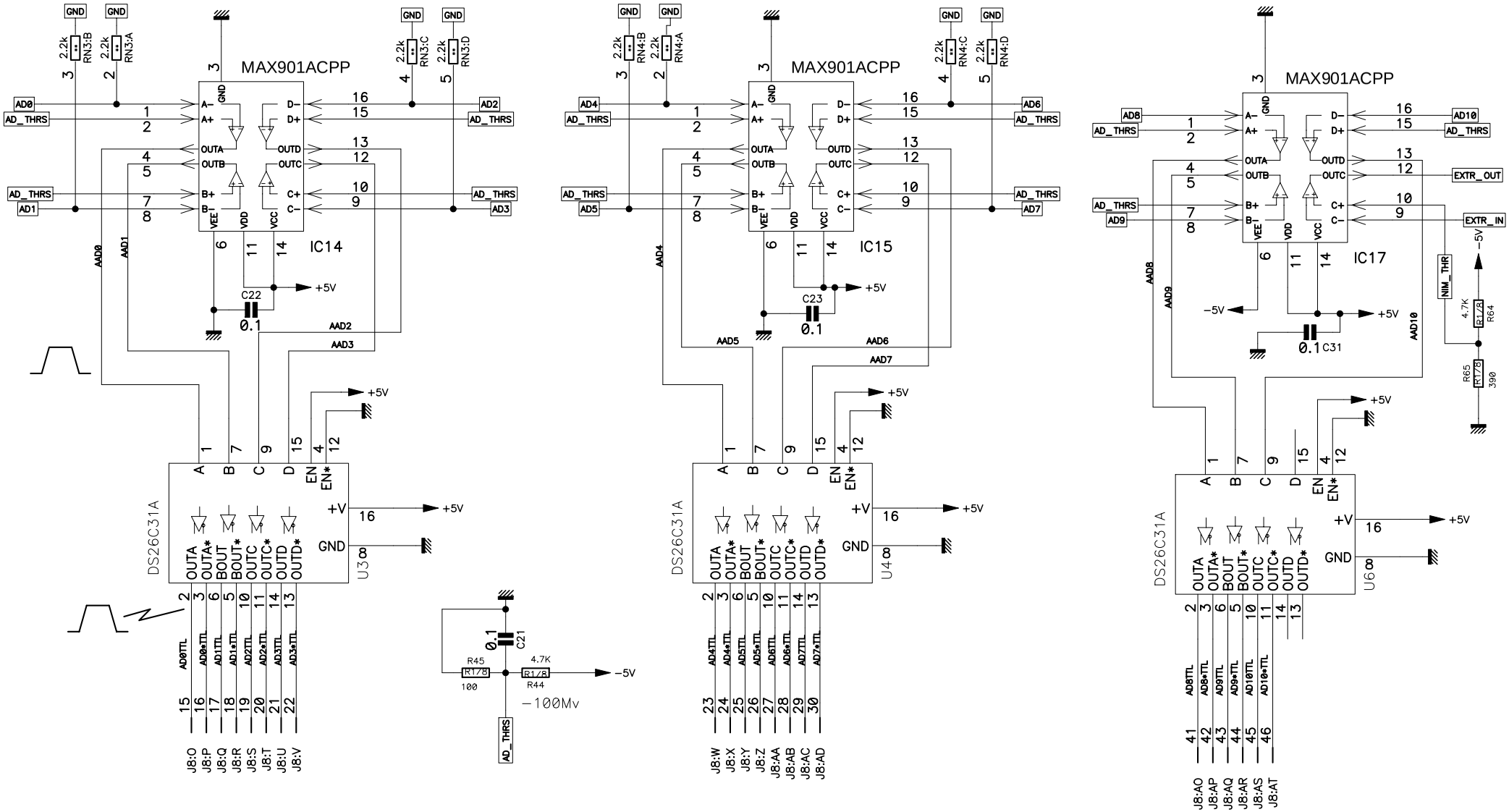

VaTalB16

Sheet # 5 of 6

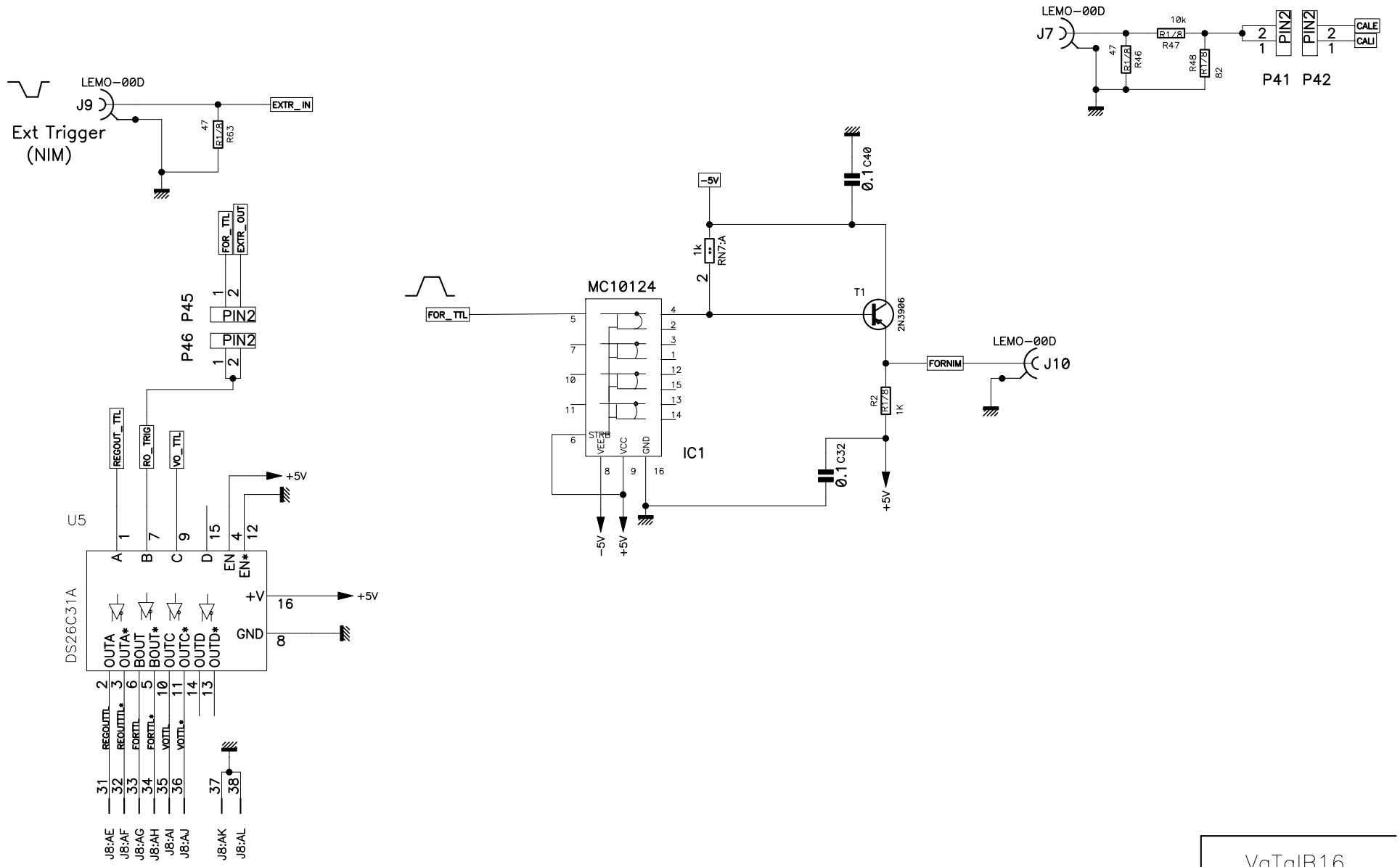

VaTalB16

Sheet # 6 of 6